REVERSIBLE BRUSHED DC RIGHT-ANGLED GEARMOTOR

Model Number:

MMP S22-346I-48V GRA52-2076

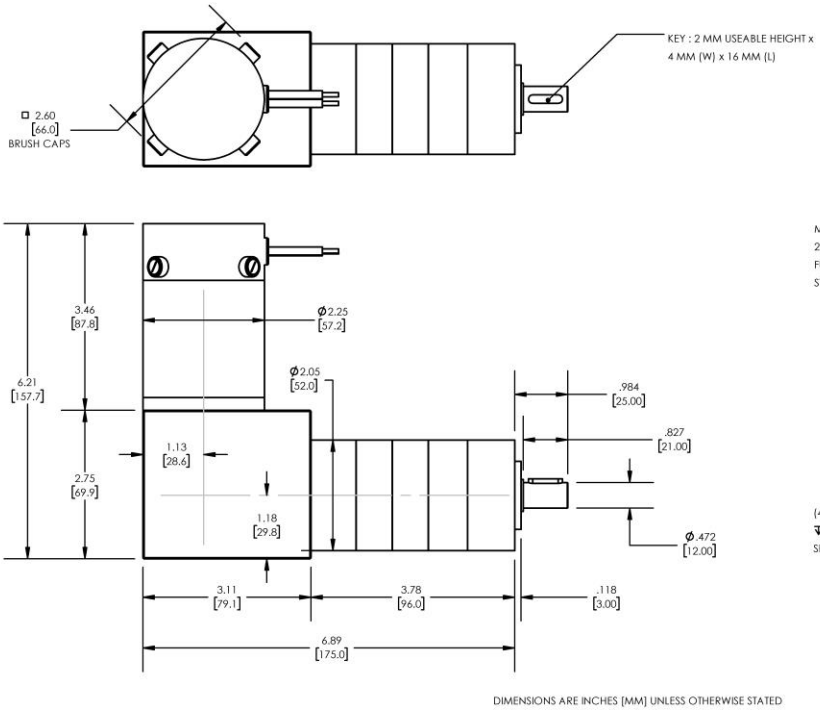

PLANETARY GEARMOTOR OUTPUT PARAMETERS:	VALUE	UNITS	TOLERANCE
Gearhead Ratio (exact)	2075.94 : 1		
Gearhead Shaft Output Speed (at full-load)	2.5	RPM	MAX
Gearmotor Rated Continuous Torque	443	In-Lbs	MAX
Gearmotor Rated Peak Torque	443++	In-Lbs	-----
Gearhead Standard Backlash	51	Arc Minutes	MAX
Gearhead Efficiency	65%	-----	-----
Output Shaft Radial Load Capacity	113	Lbs	MAX
Output Shaft Axial Load Capacity	45	Lbs	MAX
Gearmotor Total Weight	6.5	Lbs	MAX

++ All Peak Torque values are dependent upon duty. Contact our sales office for details.

DC MOTOR PERFORMANCE PARAMETERS:	VALUE	UNITS	TOLERANCE
Rated DC Voltage	48	DC VOLTS	-----
Rated Continuous Current	1.2	AMPERES	-----
No-Load Speed	5455	RPM	MAX
Rated Speed	5259	RPM	+/- 15%
Rated Continuous Power Out	20	WATTS	+/- 15%
Rated Continuous Torque	5.3	OZ-IN	-----
Peak Torque (motor only)	256	OZ-IN	-----
No-Load Current	0.71	AMPERES	MAX
Back EMF Constant (Ke)	8.8	V/KRPM	+/- 10%
Torque Constant (Kt)	11.9	OZ-IN/AMP	+/- 10%
DC Armature Resistance	1.49	OHMS	+/- 15%
Armature Inductance	0.92	mH	+/- 15%
Armature temperature	155	DEG. C	MAX

NOTES:

- ENCODER & BRAKE OPTIONS AVAILABLE – FOLLOW THIS LINK FOR DETAILS
- NEMA MOUNTING FLANGE OPTION AVAILABLE – FOLLOW THIS LINK FOR DETAILS